Triangle BioSystems, Int'l.

64 Channel Wireless Neural Headstage System

Headstage Features

- Wireless operations across 3 meters
- Operates in unlicensed radio band below FCC limits
- Available for 62 input channels
- Factory configurable gain of 150
- Rechargeable battery power with 5 hour operating time
- Bandpass filtering per channel .8Hz to 6kHz typical
- 50kHz sampling rate per channel
- Weight < 4.8 grams

Triangle BioSystems, Int'l. has developed a high channel count wireless neural headstage system that allows researchers to continuously and simultaneously monitor up to 62 neural electrodes. No longer do experiments have to be constrained by wiring a test subject to the recording system. The complete system is comprised of a wireless headstage transmitter with integrated battery, RF signal receiver/baseband demodulator, power supply and all required cables. With an effective range of 3 meters, this system provides a wireless connection between the implanted electrodes and the data recording system.

In the development of this system, TBSI utilized custom ASIC technology and proprietary radio design techniques to provide high channel count functionality in a wireless headstage that is both small and light weight (<4.8 grams). This design also incorporates neural preamplifier circuitry to create an extremely compact and powerful transmitter.

System Overview

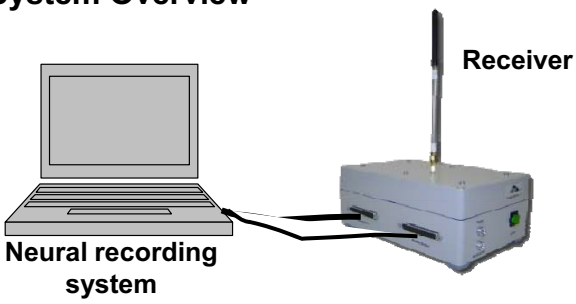

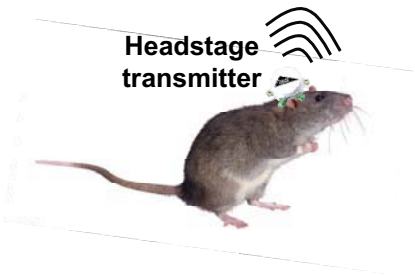

System Block Diagram

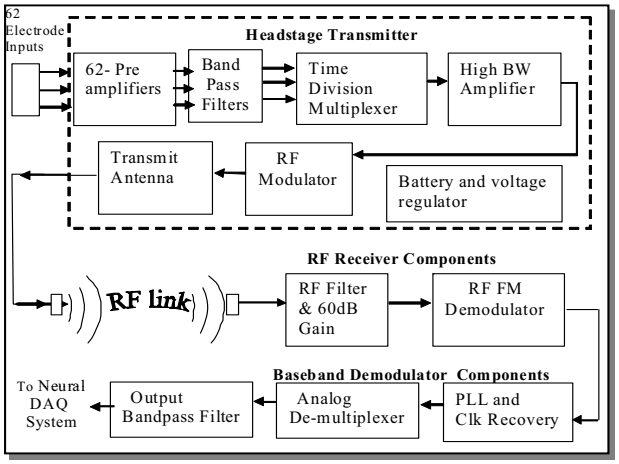

Copyright © 2010 Triangle BioSystems, Int'l. All Rights Reserved

Product Brief — Headstage Specifications

Electrical

Parameter	Min	Typ	Max	Units	Notes
Power Supply					
3 volt supply	2.75	2.8	2.85	Volts	Power consumption 11.0ma (typical)
Battery life		5		Hours	Re-chargeable battery with 2 hour recharge time
Analog Input Specs					
Input voltage range		4		mVolts	Maximum Input voltage Vp-p
Common mode center		.9		Volts	At ACgnd potential
Voltage Gain	145	150	160		Voltage gain is only set to 120
Bandwidth	.8		7000	Hz	-3dB input signal level BW
Input impedance		10M		ohms	At 1kHz
Input referred noise		10		µVrms	for DC - 10khz frequency
Sampling Rates		50		kHz	Headstage and DAC sampling rates per channel
Mechanical Specs					
Length		20.5		mm	Edge to Edge
Width		15.1		mm	Edge to Edge mounting holes (#0-80 screws)
Height		12.2		mm	Not including connector
Weight			4 .8	grams	With connector
Input connector Option 1		72		Pins	Dual Omnetics Vertical, Female 36 pin dual row nano A9094
Radio Specs					
Center frequency		3.2		GHz	With +/- 100 MHz bandwidth
Transmit power			300	µV @ 3 meters	FCC Sec.15.109B(a)
Transmit antenna		3.2		GHz	Tuned chip antenna with circular diversity
Transmit range		3.0		Meters	With receiver on top of cage

Mechanical (mm)

Top View

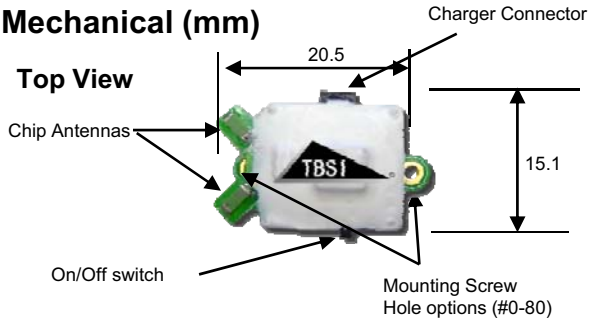

Bottom View

Dual Vertical
25mil, 36pin Omnetics

Analog RF ASIC

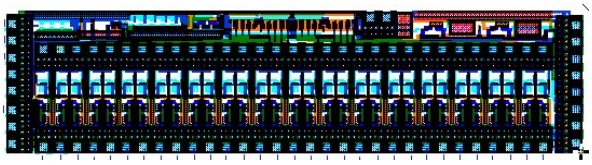

Connector Information (Omnetics dual row nano)

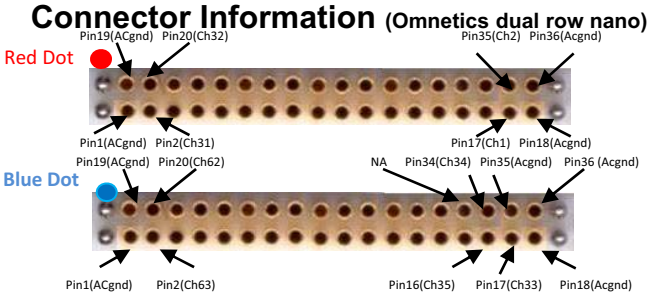

Ordering Information

64 Channel Wireless Headstages			
Part No.	**Battery Life**	**Battery Type**	**Connector Type**
64RadioHS_025_DV36	**5 hour**	**Internal**	**Dual 36**
64RadioHS_025_DV36_24H	**24 hour**	**External**	**“**
64NeuroRadioRX	Wireless Receiver/Demodulator		

2228 Page Rd.
Suite 108
Durham, NC 27703
P 919 361 2663
F 919 544 3061
www.trianglebiosystems.com

Copyright © 2010 Triangle BioSystems, Int'l. All Rights Reserved